IEEE
ELECTRON DEVICES SOCIETY
Newsletter

JULY 2022 VOL. 29, NO. 3 ISSN: 1074 1879 EDITOR-IN-CHIEF: DANIEL TOMASZEWSKI

Table of Contents

IEEE

75th Anniversary of the Transistor

History and Emerging Designs of Power Transistors

B. Jayant Baliga
North Carolina State University

Electricity was playing a major role in the lives of people by the middle of the 20th century. Electric lighting, pioneered by Edison, had improved productivity, quality of life, and safety by illumination of our streets, factories, and residences. Refrigeration, enabled by efficient motors, had transformed the storage of perishable foods in homes while preserving them during delivery from farms to the market. The replacement of mechanical actuators for these application with electronic switches became a possibility after the invention of the bipolar transistor (Shockley, Bardeen, and Brattain, Bell Labs, 1947). For applications operating at high power levels, the ideal electronic switches must exhibit the following characteristics: (a) high voltage blocking capability; (b) low on-state voltage drop to reduce conduction losses; (c) fast switching capability for the voltage and current to minimize switching losses; (d) ability to tolerate simultaneous imposition of high voltage and current during the switching transient for ruggedness; (e) control of current using a small voltage with low drive currents to allow integration of the drive electronics; and (f) current saturation under drive voltage control to avoid the need for snubber elements. In addition, an ideal power transistor should be able operate symmetrically in the first and third quadrants. The quest to create a power transistor that satisfies these requirements has driven innovations in the technology during the last 60 years.

This article highlights important power transistor innovations that have occurred since the 1960s allowing displacement of analog power control (phase control) with digital power control (pulse width modulation). These innovations initially required changes in device architecture and physics for silicon based transistors. Subsequently, even greater performance enhancements were achieved by

(continued on page 3)

History and Emerging Designs of Power Transistors

(continued from page 1)

replacing silicon with wide band gap semiconductor materials.

The power bipolar transistor architecture (Fig. 1 left) was a departure from the signal transistor due to the need for supporting the high voltages and controlling the high currents required in power applications. The power transistor requires a vertical structure with one of the high current terminals (collector) located at the bottom of the chip, with the other high current terminal (emitter) formed at the top. The base terminal must be interdigitated with the emitter because on-state current flow concentrates at the emitter edges due to the emitter crowding effect. A thick drift region with low doping concentration is required to support the high voltages, resulting in a large on-state resistance despite some conductivity modulation. Most significantly, a large base width is necessary to avoid reach-through limited breakdown, resulting in a low current gain (typically < 10 in the on-state). A large reverse base drive current is needed during turn-off to shorten the storage time, resulting in a current gain of only 2. Bulky and complex base drive circuits were consequently needed, which created reliability issues. The safe operating area of the power bipolar transistor was also poor, making addition of snubber components necessary.

The Darlington power bipolar transistor (Fig. 1 right) was developed to ameliorate the problem with low on-state current gain. It utilizes a base drive transistor T_1 to provide drive current to the output transistor T_2, as shown by its equivalent circuit in Fig. 1. This approach allowed increasing the current gain in the on-state but the turn-off gain was still poor. More significantly, the Darlington power transistor has a diode-like on-state characteristics because of current flow of transistor T_1 through the base-emitter junction of transistor T_2. This makes its on-state voltage drop much larger than the single bipolar transistor.

The availability of the CMOS technology for integrated circuits enabled making power Metal-Oxide-Semiconductor Field Effect Transistors (MOSFETs) in the 1970s. The double-diffused or D-MOSFET (Fig. 2 left) was first commercialized by several companies (International Rectifier, Siliconix). It's channel length is determined by the difference in diffusion depths of the P-base and N+ source regions, allowing short channel length (1 to 1.5 μm) to be achieved with 5 μm lithography process tolerances at that time. This device also has a vertical structure that contains a thick drift region with low doping concentration to support high voltages. It adds substantial on-state resistance for devices with high blocking voltages. On-state current flow occurs when a positive gate drive voltage is applied to the gate to induce an inversion layer at the surface of the P-base region to create a channel. The resistances of the channel and JFET regions contribute substantially to the total on-resistance for devices with low blocking voltages (< 100 V). This device exhibited most of the desired characteristics for the

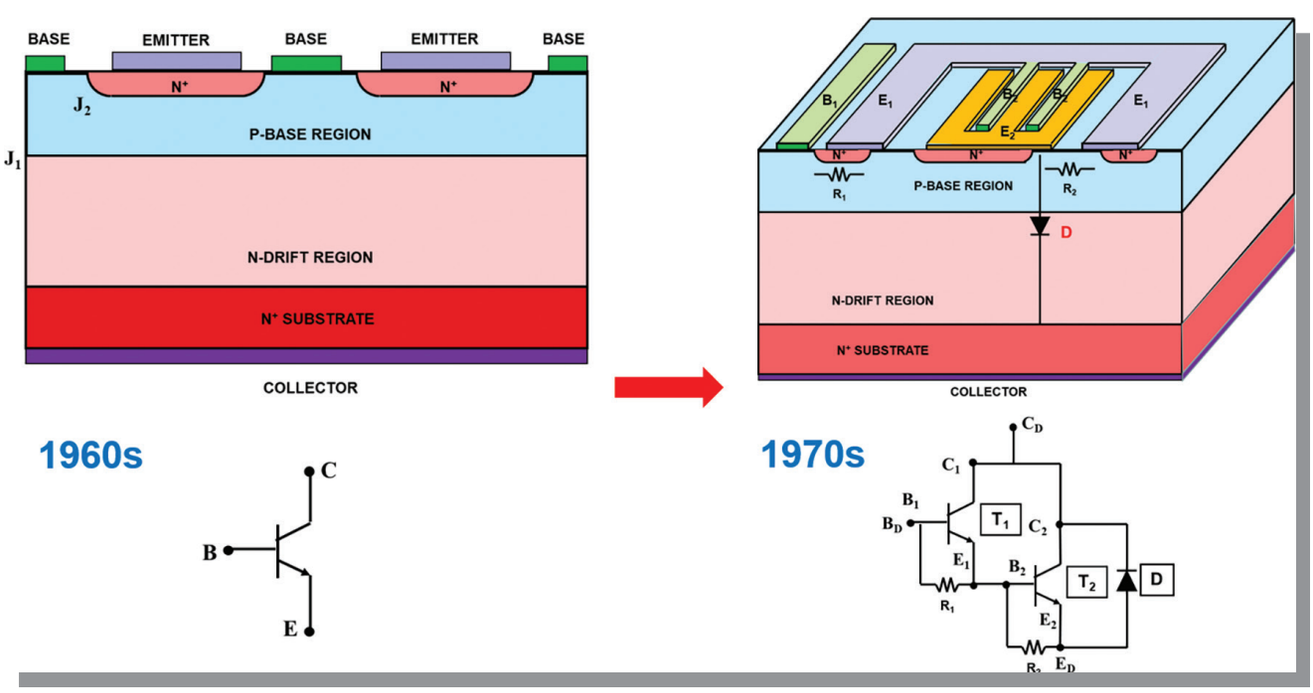

Figure 1. Evolution of Power Bipolar Transistors.

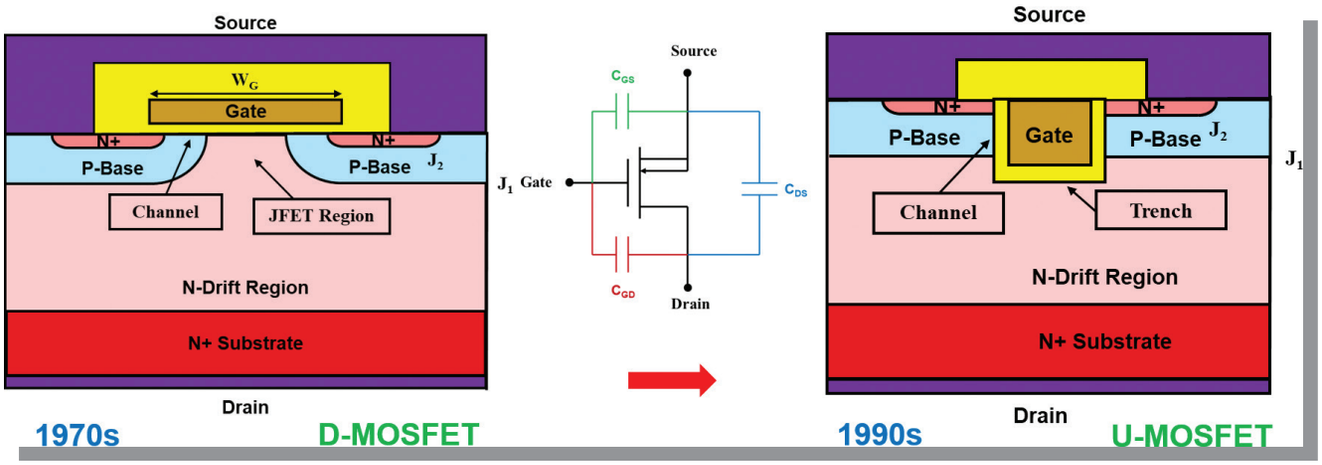

Figure 2. Evolution of Power Metal-Oxide-Semiconductor Field Effect Transistors.

ideal electronic switch when the blocking voltage was less than 100 V.

The quest to realize lower on-resistance lead to the introduction of the power U-MOSFET (Fig. 2 right) by the industry in the 1990s (Siliconix). The JFET region resistance was eliminated using this structure allowing increasing the channel density as well. The U-MOSFETs reduced the on-resistance by a factor 3x for devices with 30 V ratings. However, the input capacitance for the devices (C_{GS} in the equivalent circuit in Fig. 2) increased substantially slowing down the switching speed. However, the overall performance improvement made this structural design dominant in the 1990s.

A major breakthrough in enhancing the performance of silicon power MOSFETs occurred with the introduction of the two-dimensional charge-coupling concept in the 1990s. The first approach (Baliga, NCSU, U.S. Patent 5,637,898, 1997) was proposed with a source electrode inside a deep trench to produce the desired 2D charge-coupling. The GD-MOSFET (Fig. 3 left) with a linearly graded doping profile in the drift region was shown to greatly improve the electric field distribution in the drift region, allowing increasing its doping concentration far above (> 10x) that possible with the previous designs shown in Fig. 2. This approach reduced the drift region resistance well below what was previously considered the limit for ideal on-resistance for silicon material. The device structure, now commonly called the split-gate MOSFET (a misnomer because it contains only one gate electrode), has become the most popular product manufactured by leading power device companies (Alpha and Omega, Infineon) with blocking voltages up to 150 V. These devices are widely used for building

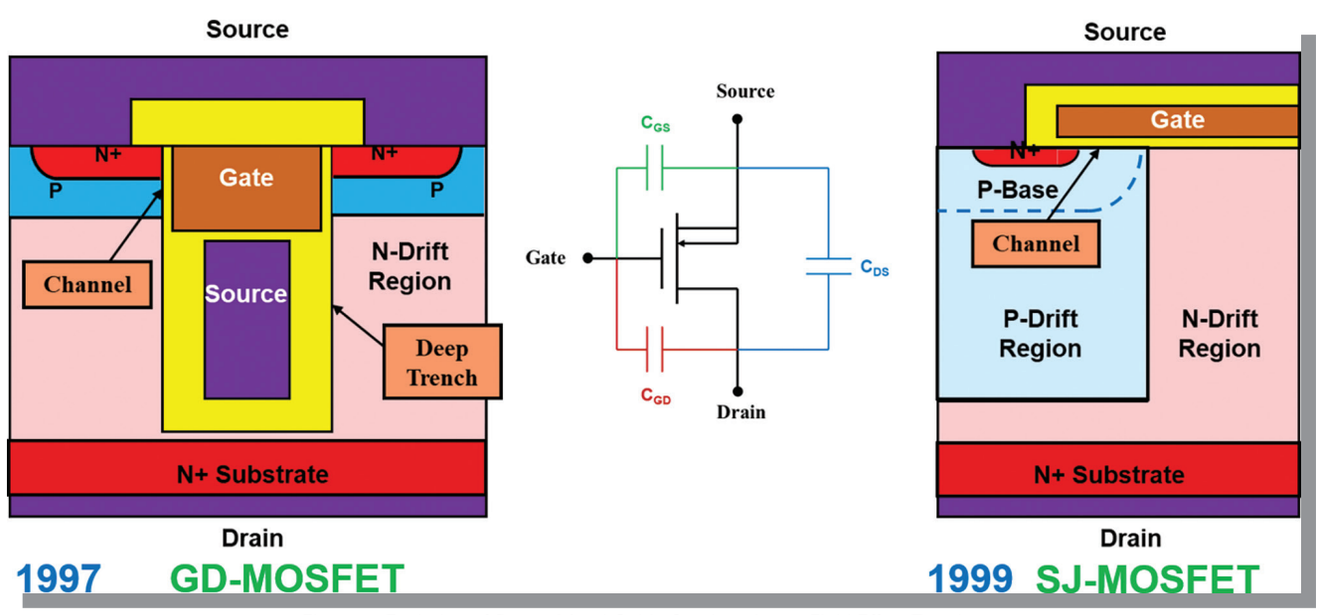

Figure 3. Evolution of Power Metal-Oxide-Semiconductor Field Effect Transistors.

power supplies to serve microprocessors and graphics chips in desktop and laptop computers.

The second approach (Lorenz, Infineon, ISPSD 1999) utilized a vertical junction produced by the addition of a deep P-type drift region operating in parallel with the N-type drift region to achieve the 2D charge-coupling. This device design (Fig. 3 right), commonly referred to as the super-junction (SJ) MOSFET, has become popular for making products with blocking voltages of 600 – 900 V. These devices are used in motor drive applications when switching losses are dominant. Products are available from many companies. (Infineon, ST Microelectronics).

The Insulated Gate Bipolar Transistor (IGBT) was invented, developed and commercialized in the early 1980s to replace the bipolar junction transistor due to its many short-comings (Baliga, General Electric, U.S. Patent 4,969,028, Filed 1980, Issued 1990). The device structure (Fig. 4 left) can be designed to be capable of blocking voltage in the first and third quadrant (Symmetric IGBT) at junctions J_1 and J_2 or only in the first quadrant (Asymmetric IGBT). The IGBT operates by creating an MOS-channel using a positive gate bias, which delivers the base drive current to the internal wide-base P-N-P bipolar transistor. Collector current flow is generated using both electrons via the channel and holes via the P-N-P transistor within the same drift region, called MOS-bipolar current transport. The device can be turned-off by reducing the gate voltage to zero to shut off the electron supply. The holes in the drift region are removed by recombination, creating a current tail that produces switching losses.

The proposed IGBT design was a radical departure because of employing a wide-base P-N-P transistor rather than the narrow-base N-P-N transistors used for power transistors at that time. Skeptics believed that this would severely limit the current flow making the device inferior to power bipolar transistors. My analysis, based upon high level injection physics within the N-base region (N-drift region), predicted P-i-N rectifier like on-state characteristics with low on-state voltage drop even at high current densities. This analysis was fortunately proven to be correct when actual devices were fabricated and tested.

A major hurdle for the IGBT was potential latch-up of the internal 4-layer thyristor, which could result in destructive failure. This issue was overcome using the deep P^+ region (Fig. 4 left) added to the basic double-diffused MOSFET process (Baliga and Adler, General Electric, U.S. Patent 4,443,931, 1984). The IGBT was then believed to be limited to low operating frequencies, thus constraining its applications, because methods to control the minority carrier lifetime at that time led to damaging the MOS gate structure. Fortunately, I discovered a process that allowed using high energy electron irradiation to reduce the lifetime in the drift region followed by a low temperature annealing process that removed the damage in the gate oxide. This was crucial to creating IGBTs that could operate over a large range of switching speeds (Baliga, IEEE EDL, 1983), opening up a wide spectrum of applications within GE at first and then beyond.

Based on my pitch in November 1980 projecting wide-spread impact of the IGBT within the Motor Drives, Lighting, Appliances, and Medical divisions at the General Electric Company, the Chairman, Jack Welch, approved full support for my development and commercialization of the IGBT. Based on this support, I was able to engineer and build the IGBT directly in the power MOSFET manufacturing line in less than 10 months. This had to be accomplished with no flaws during chip design and process definition, to ensure first pass success, due to the intense corporate scrutiny.

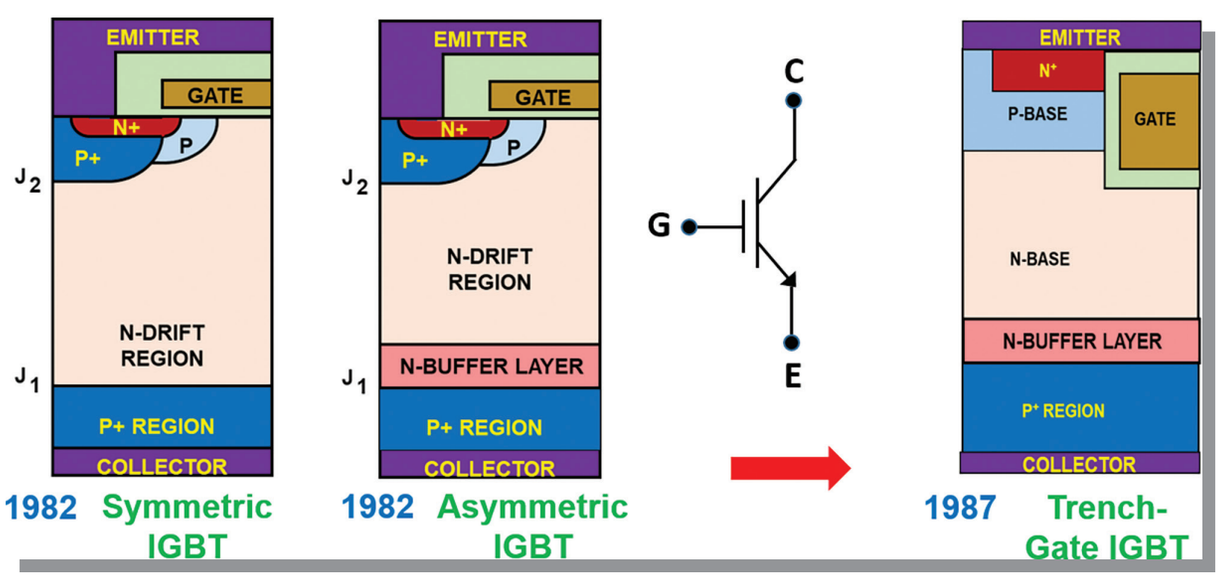

Figure 4. Evolution of Insulated Gate Bipolar Transistors (IGBTs).

This was a critical step in making the IGBT available in large quantities for use at GE to build the first adjustable speed motor drives for heat pumps, and novel lamps that were precursors of the compact fluorescent lamps that became commercially viable in the 1990s. Jack Welch embargoed any publication of information regarding the IGBT due its value to GE applications. This embargo was eventually broken by announcement of an IGBT product D94F4 by the Semiconductor Products Division in June 1983. It's applications were promoted by GE (Baliga and Smith, IEEE APEC, 1983), which resulted in a "Product of the Year" Award. After the release of my publications by GE on the attributes of the IGBT from 1983 to 1985, products were developed and introduced by many companies (Toshiba, Mitsubishi Electric, Fuji Electric) in Japan starting in 1985.

IGBT innovations were also made in Europe (ABB, Siemens) in the 1990s with the transparent emitter design (Fig. 5 left). The P^+ emitter region was replaced with a thin P-diffusion on the bottom of the wafer with low doping concentration to reduce the injection efficiency. This was found to reduce switching losses for very high voltage (> 4 kV) devices required to replace gate-turn-off (GTO) thyristors used for electric locomotive drives. This technology was rapidly optimized in Europe and Japan for wide spread use in urban and long distance public transportation.

An improvement to the trade-off between the on-state voltage drop and switching speed for the IGBT was achieved by employment of the trench-gate structure (Chang and Baliga IEEE IEDM, 1987). The trench-gate design (Fig. 4 right) increases channel density, providing more drive current to the internal bipolar transistor, to reduce on-state voltage drop. Another IGBT design innovation that was shown to improve the performance of high voltage IGBT devices was the deep trench structure (Toshiba, IEEE ISPSD, 1998) with a narrow P-base region (Fig. 5). This approach enhanced the conductivity modulation of the drift region resulting in lower on-state voltage drop.

Over the last 4 decades, the IGBT has become very popular for a large variety of applications (Baliga, The IGBT Device, Elsevier, 2015). It is used in all sectors (transportation, lighting, consumer, industrial, medical, etc.) of the economy to enhance the quality of life for billions of people around the world. The creation of the electronic ignition system using IGBTs for gasoline powered cars and trucks has reduced gasoline consumption by 1.8 trillion gallons from 1990-2020. The development of adjustable speed motor drives using IGBTs has reduced electricity consumption by 73,000 Tera-Watt-Hours from 1990–2020. The deployment of 20 billion compact fluorescent lamps using IGBT electronic ballasts has reduced electricity consumption by 59,900 Tera-Watt-Hours from 1990–2020. These applications of the IGBT have saved consumers $ 33.6 Trillion while reducing carbon-dioxide emissions by 181 Trillion pounds from 1990–2020 to mitigate global warming.

All solar and wind power generation relies upon using the IGBT to convert the energy into a stable 50 or 60 Hz AC power that can be delivered to the grid. In addition, the IGBT is used for the inverters for driving the motors in electric cars manufactured by all automobile companies. It will therefore play an essential role in the elimination of fossil fuels in the electricity generation and transportation sectors to combat climate change.

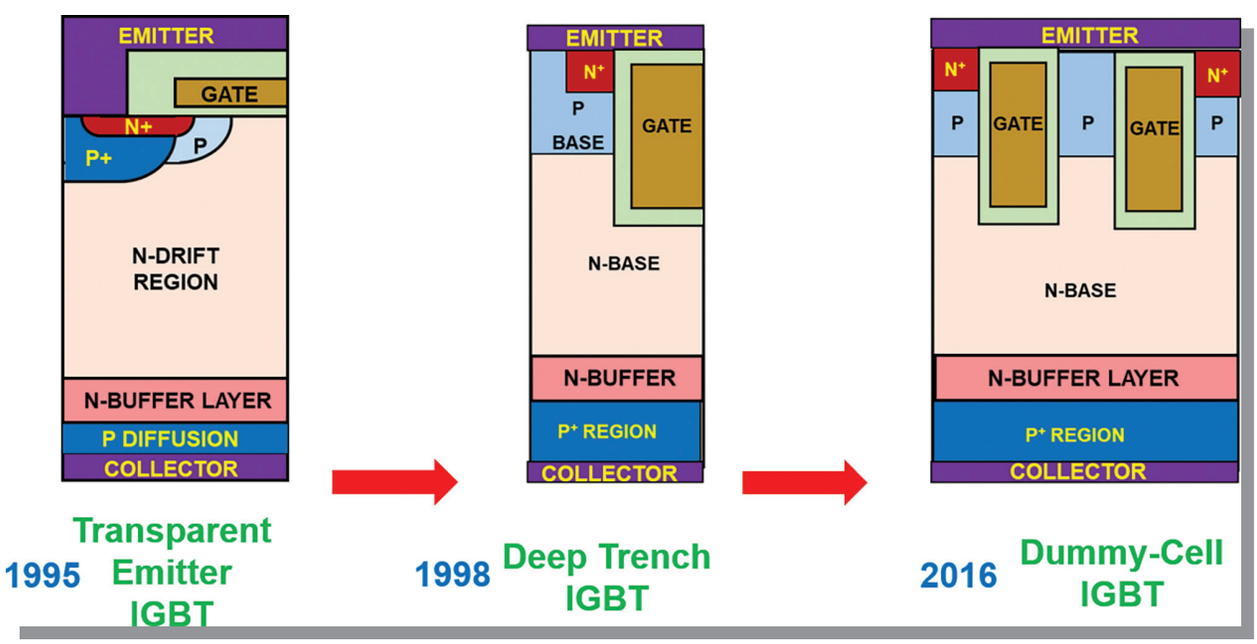

Figure 5. Evolution of Insulated Gate Bipolar Transistors (IGBTs).

The history of evolution of power devices includes a quantum leap in performance that was enabled by wide band gap semiconductor materials. The impact of replacing silicon with wide band gap semiconductors was first recognized by the derivation of an equation relating the drift region resistance in a vertical unipolar power device to the basic material properties, now commonly called Baliga's Figure-of-Merit or BFOM (Baliga, GE, JAP, 1983; IEEE EDL, 1989). This equation predicted 13.7-fold reduction in resistance by using gallium arsenide and more than 100-fold reduction in resistance by using silicon carbide (SiC). The theory was validated in the 1990s, after the availability of 6H-SiC wafers, by fabricating 400 V Schottky rectifiers (Bhatnagar, McLarty and Baliga, IEEE EDL, 1992) and subsequently the first high performance SiC power MOSFETs. (Shenoy and Baliga, IEEE EDL, 1997). This required altering the power MOSFET structure to (a) shield the P-base region to prevent reach-through breakdown; (b) shield the gate oxide from high electric fields; and (c) employing accumulation channels to increase the channel mobility. The 4H-SiC planar-gate MOSFET structures that are now commercially available employ the shielded structures (Baliga, NCSU, U.S. Patent 5,543,637, 1996) with accumulation or inversion channels (Fig. 6).

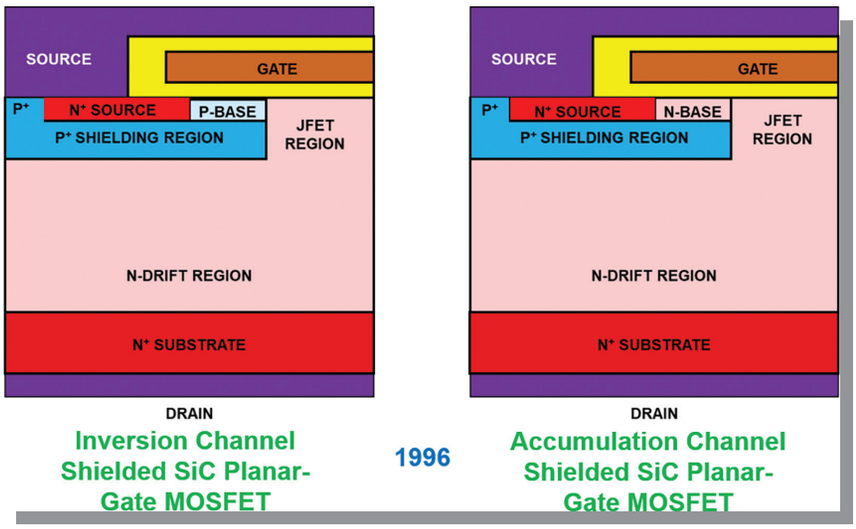

Figure 6. Evolution of Planar-Gate Silicon Carbide Power MOSFETs.

The D-MOSFET process used for silicon power MOSFETs cannot be used for SiC devices due to insignificant diffusion of dopants in this material even at very high temperatures that lead to sublimation. The channel is therefore formed by staggered ion-implantation of the P and N-type dopants used to form the P-base and N^+ source regions (Bhatnagar and Baliga, U.S. Patent 5,322,802, 1994; Shenoy, Cooper and Melloch, IEEE EDL, 1997). This requires high resolution photolithography to create the sub-micron channel lengths needed to achieve a low on-state resistance in the power MOSFETs. Commercial SiC planar-gate power MOSFETs are manufactured using this technology.

The reduction in switching power losses in motor drives by replacement of silicon IGBTs with SiC power MOSFETs was projected (Baliga, NCSU, Proceedings IEEE, 1994) and subsequently experimentally demonstrated (Fabre, et al., ALSTHOM, IEEE TPE, 2015). However, the cost of SiC power MOSFETs is at present more than 3-times that for the equivalent rated silicon IGBT, impeding its commercial viability. The strategy undertaken by the industry to overcome the higher cost of this technology is to operate the power electronics at a much higher frequency to reduce the cost of passive elements, such as inductors and filters, to offset the semiconductor cost. The operation of SiC power MOSFETs at higher frequencies requires design innovations to reduce drain current and voltage transient times during switching. Faster drain voltage transient times during switching can be achieved in SiC power MOSFETs by reducing the gate-drain charge.

One innovative design (Fig. 7 left) to achieve this employs a central-implanted P^+ region inside the JFET region (Zhang, et al., CREE, IEEE ISPSD, 2015). Additional process steps are required to add the P^+ region and it must be connected to the source electrode orthogonal to the cross-section. The second innovative approach (Fig. 7 middle) is the split-gate device design (Han, Baliga, and Sung, NCSU, IEEE EDL, 2017) where the width of the gate electrode is shortened over the JFET region. This design reduces the gate-drain charge by a factor of 2.4-times without any additional process steps. The third innovative design approach (Fig. 7 right) is the buffered-gate design (Han, Baliga, and Sung, NCSU, IEEE EDL, 2018) where the edge of the P^+ shielding region is extended beyond the edge of the split-gate electrode. This design reduces the gate-drain charge by a factor of 6-times but requires an additional process step to include a second JFET region.

In typical voltage source inverters using the H-bridge topology with silicon IGBTs, it is necessary to connect an anti-parallel diode for operation of the adjustable speed drive for motors. In principle, the anti-parallel diode is not required for the SiC power MOSFET due to current flow via the P-N body diode. However, this approach has been found to result in high switching power losses due to the bipolar diode reverse recovery phenomenon at elevated temperatures. In addition, a phenomenon called bipolar degradation of the SiC power MOSFET was discovered where defects are generated in the

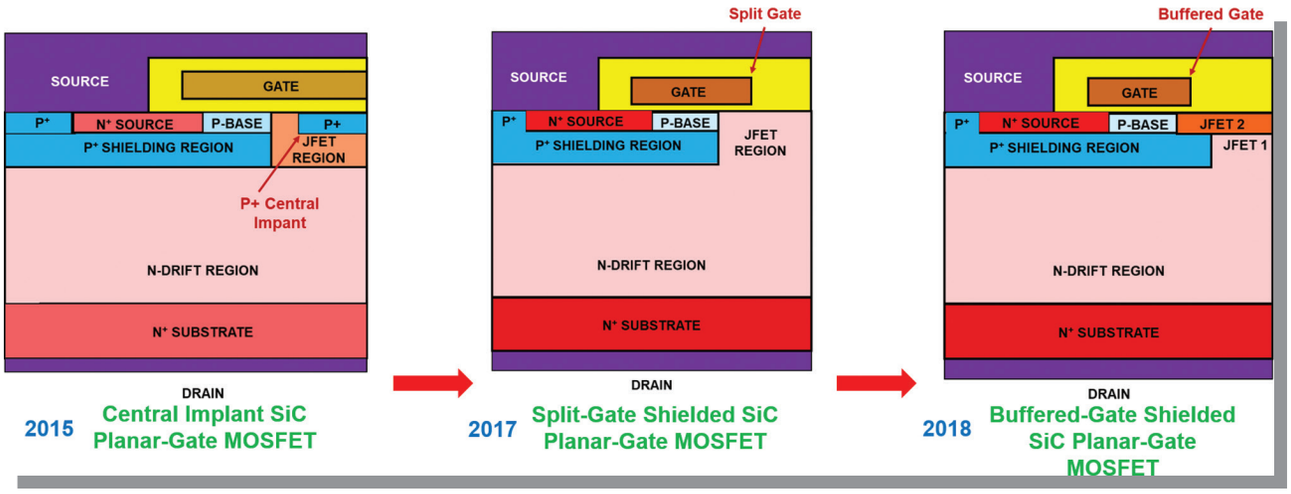

Figure 7. Evolution of Planar-Gate Silicon Carbide Power MOSFETs.

drift region due to the P-N diode bipolar current flow. A discrete junction barrier controlled Schottky (JBS) diode (Baliga, GE, IEEE EDL, 1984; Held, Kaminski, and Niemann, ABB, Material Science Forum, 1998) can be connected across the SiC power MOSFET to prevent current flow via the body diode. This adds another packaged component with significant SiC chip area and cost. An innovative design (Fig. 8) integrates the JBS diode into the SiC power MOSFET cell structure (Sung and Baliga, NCSU, IEEE EDL, 2016). This structure was created by engineering the source contact process to simultaneously make a Schottky barrier contact to the drift region at the JBS diode and ohmic contacts to the N^+ source and P^+ shielding regions.

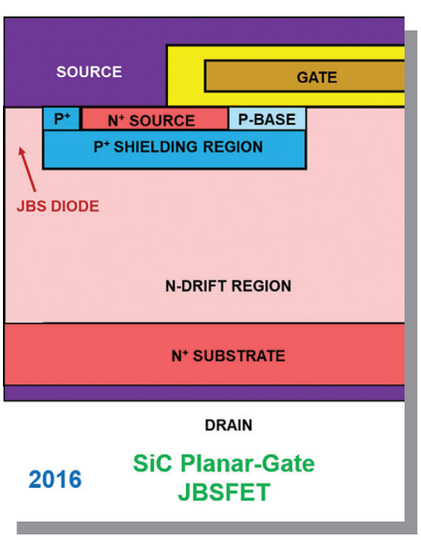

Figure 8. Evolution of Silicon Carbide Power MOSFETs.

As in the case of silicon power MOSFETs, trench-gate technology can be employed for SiC power MOSFETs to reduce the on-state resistance due to elimination of the JFET region and increase in channel density. The major challenge for this approach is a very high electric field in the gate oxide at the bottom of the trench that can lead to unreliable operation and even catastrophic failure. The first innovative design (Fig. 9 left) to solve this problem utilizes a P^+ shielding region at the bottom of the trench which is connected to the source electrode orthogonal to the cross-section (Baliga, NCSU, U.S. Patent 5,396,085, 1995; Li, Cooper and Capano, Purdue University, IEEE EDL, 2002). The second approach (Fig. 9 middle) makes use of two trench regions (Harada, et al, Rohm, IEEE ISPSD, 2012), one to form the gate structure and a second deeper one for shielding the gate oxide. The third approach (Fig. 9 right) makes use of a shallow trench to form the gate structure and two deeper trenches to shield the gate oxide (Peters, et al, Infineon, PCIM 2017). In all three designs, a JFET region is created when shielding the gate oxide, which must be adequately doped to reduce the on-state resistance without degrading the breakdown voltage. Good on-state resistance, breakdown voltage and gate oxide shielding was observed with the first approach, while the lowest gate oxide electric field was observed for the third approach with a higher on-state resistance (Agarwal, Han and Baliga, NCSU, IEEE WiPDA, 2018).

As mentioned in the beginning of this article, the 'holy grail' for the power semiconductor community during the last 60 years has been to create a power switch with symmetric behavior in the first and third quadrants, gate voltage controlled output characteristics with current saturation, low on-state voltage drop, and fast switching capability. Power electronics engineers have used multiple discrete devices to assemble such a switch for use in matrix converters (Baliga and Han, NCSU, GOMACTech, 2018). A compact, monolithic 4-terminal bi-directional power switch, named the BiDFET, has been recently achieved (Baliga, NCSU, U.S. Patent 10,804,393, 2020; Han, et al., NCSU, IEEE ISPSD, 2020) by integration of two JBSFETs (Fig. 10). These devices will enable a new generation of power electronics that is more compact and efficient.

Excellent power devices can also be created using another wide bad gap semiconductor, gallium nitride (GaN). The ability to grow device

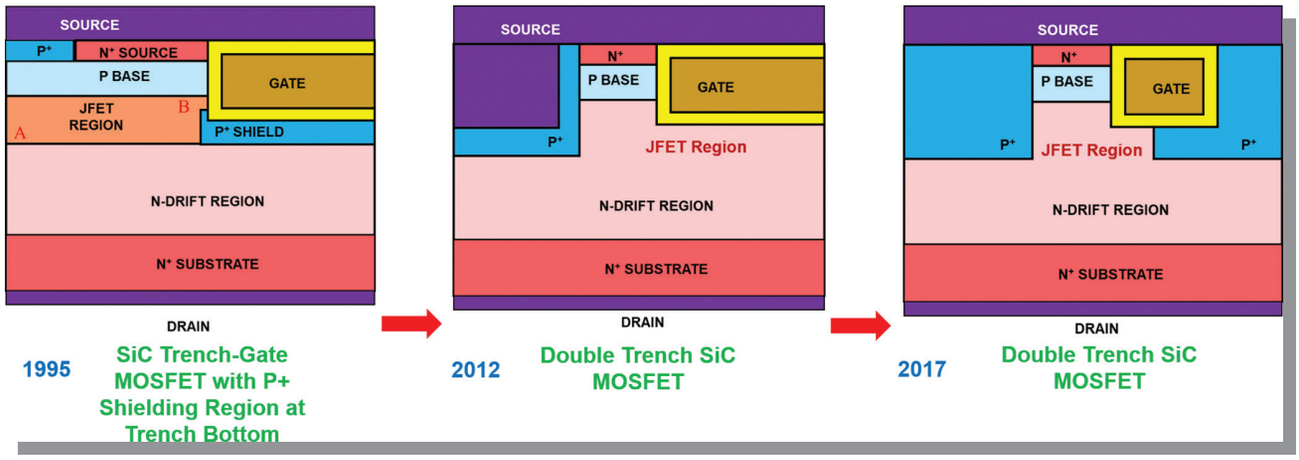

Figure 9. Evolution of Trench-Gate Silicon Carbide Power MOSFETs.

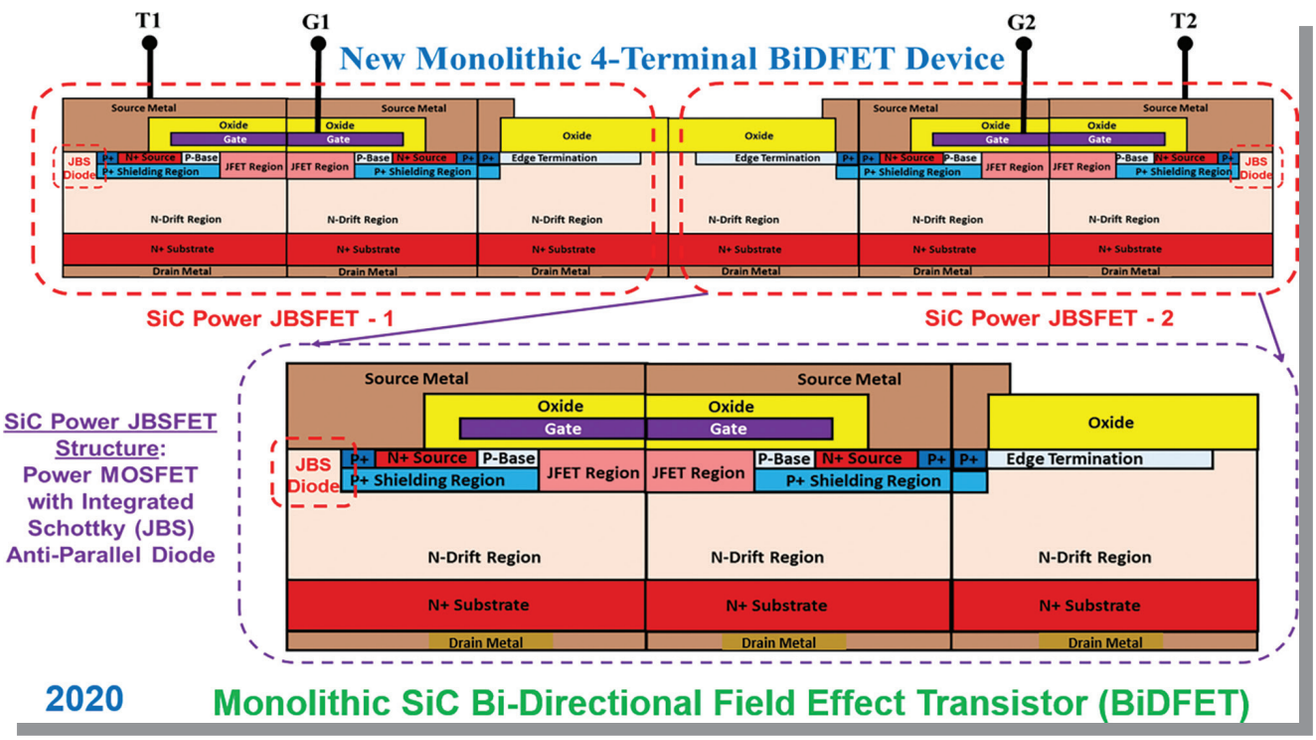

Figure 10. Monolithic SiC Bi-Directional Field Effect Transistor (BiDFET).

quality epitaxial layers of GaN on low cost, large diameter, silicon substrates is a unique attribute of this approach. However, this requires fabrication of lateral high voltage power devices with inter-digitation of the drain, gate, and source electrodes, which can make the chip design challenging due to current crowding and parasitic metal resistances. The formation of a two-dimensional electron gas (commonly referred to as a 2D-gas) at the interface between GaN and aluminum gallium nitride (AlGaN) creates a layer with low sheet resistance to reduce on-state resistance. The first devices (Fig. 11 left) used a metal-gate (Schottky barrier) contact that produced normally-on behavior in the high-electron-mobility-transistor (HEMT) device. Since this is unacceptable for use in power circuits, this design was combined with a low-voltage silicon MOSFET to form the Baliga-Pair or Cascode topology (Baliga, NCSU, U.S. Patent 5,396,085, 1995; Transphorm and IRF products). Subsequently, normally-off GaN HEMT devices (Fig. 11 middle and right) were created using the recessed gate design (Saito, et al., IEEE TED, 2006) and P-GaN gate region (Holt, et al., IEEE IPES, 2010). The lateral configuration of these devices allows making multiple power transistors on the same chip to build compact power integrated circuits for applications

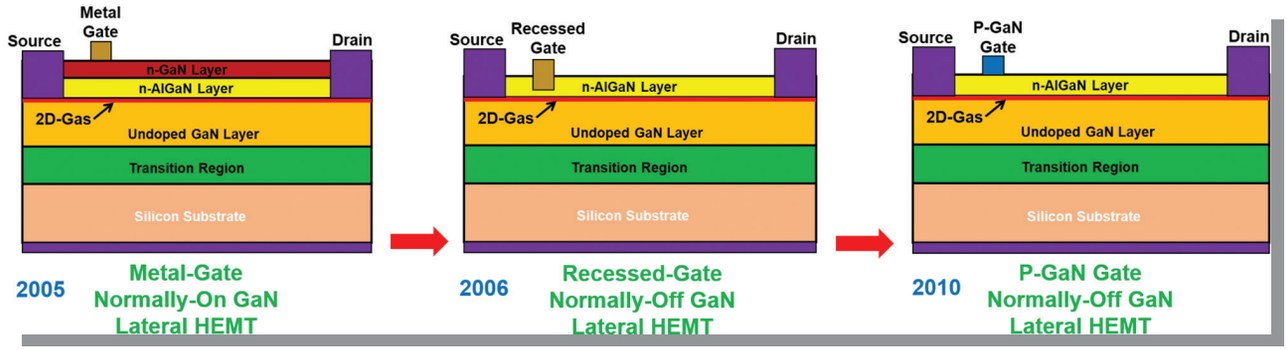

Figure 11. Gallium Nitride Lateral HEMT Power Devices.

such as laptop and cellphone chargers. The devices may be suitable for motor drives for electric vehicles but face a strong completion from the previously discussed SiC power MOSFET in this application space.

Despite 40 years of progress, innovations in power semiconductor devices continue to enhance their performance. They have become essential technology for providing consumers with enhanced comfort, mobility, and quality of life. The transition from fossil fuels to renewable energy for our electricity needs and electric vehicles for our transportation can only be accomplished by utilizing power semiconductor devices.

Acronyms

APEC: Applied power Electronics Conference
EDL: Electron Device Letters
IEDM: International Electron Devices Meeting
IPES: International Conference on Integrated Power Electronic Systems
ISPSD: International Symposium on Power Semiconductor Devices and ICs
JAP: Journal of Applied Physics
PCIM: Power Conversion and Intelligent Motion Conference
TED: Transactions on Electron Devices
TPE: Transactions on Power Electronics
WiPDA: Wide bandgap semiconductor Power Device and Applications Workshop

Biography

an
rt
s.
of
emy of Engineering and a Life Fellow of the IEEE. He spent 15 years at the General Electric Research and Development Center, Schenectady, NY, leading their power device effort and was bestowed the highest scientific rank of Coolidge Fellow. He joined NC State in 1988 as a Full Professor and was promoted to the rank of 'Distinguished University Professor' in 1997. Among his many NCSU honors, he was the recipient of the 1998 O. Max Gardner Award given by the North Carolina University Board of Governors to the one person within the 16 constituent universities who has made 'the greatest contribution to the welfare of the human race'; and the 2011 Alexander Quarles Holladay Medal of Excellence, the highest honor at NCSU from the Board of Trustees. Prof. Baliga has authored/edited 22 books and over 700 scientific articles. He has been granted 122 U.S. Patents. The IEEE has recognized him numerous times—most recently with the highest award, the IEEE Medal of Honor. Scientific American magazine included him among the 'Eight Heroes of the Semiconductor Revolution' when commemorating the 50th anniversary of the invention of the transistor. Prof. Baliga invented, developed and commercialized the Insulated Gate Bipolar Transistor (IGBT) at GE. He was inducted into the National Inventors Hall of Fame as the sole inventor of the IGBT. The IGBT is extensively used in the consumer, industrial, lighting, transportation, medical, renewable energy, and other sectors of the economy. It has enabled enormous reduction of gasoline and electrical energy use, resulting in huge cost savings to consumers, and reduction of world-wide carbon dioxide emissions. A detailed description on the applications and social impact of the IGBT is available in one of his books. He received the National Medal of Technology and Innovation, the highest form of recognition given to an engineer by the United States Government, from President Obama in October 2011, at the White House; and the North Carolina Award for Science from Governor Purdue in October 2012, and the Global Energy Prize in 2015.